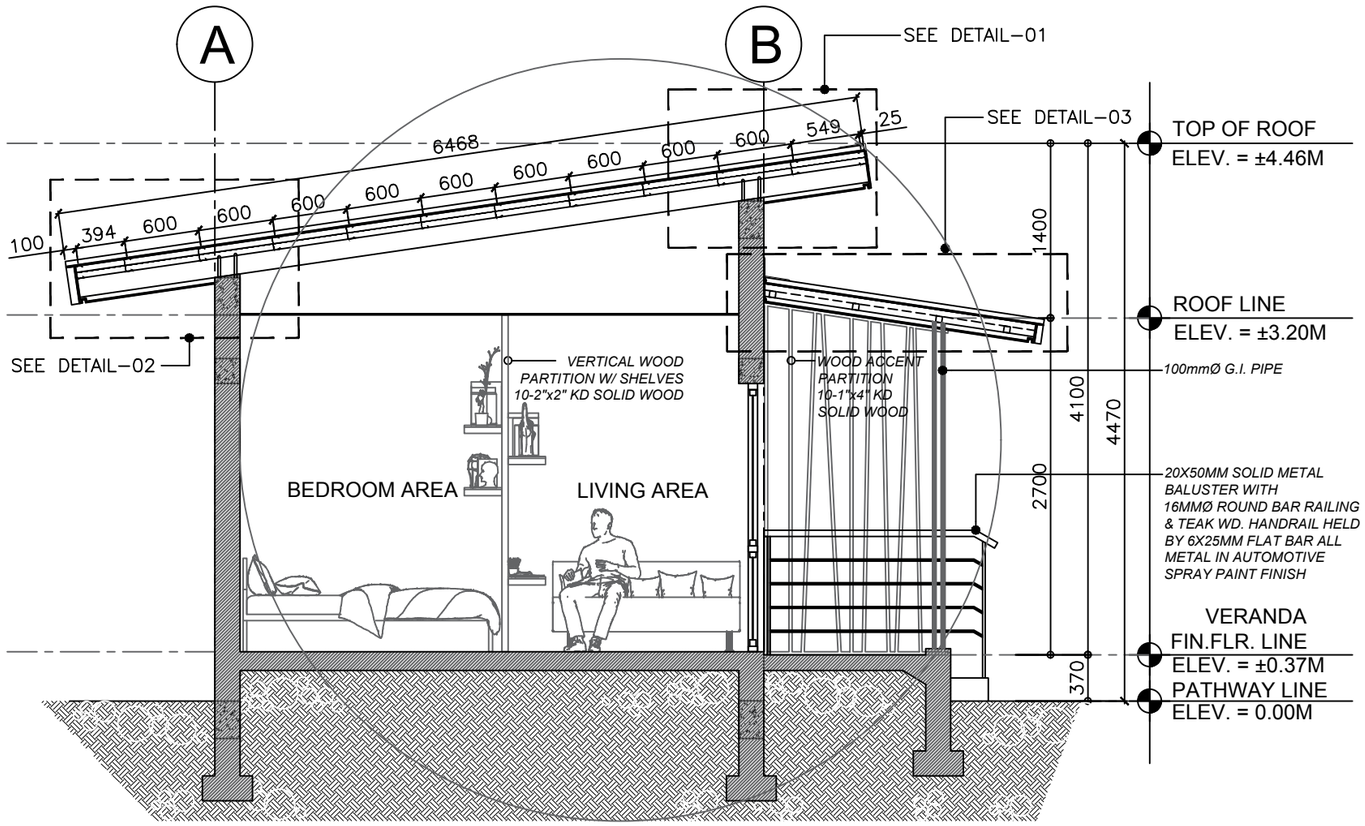

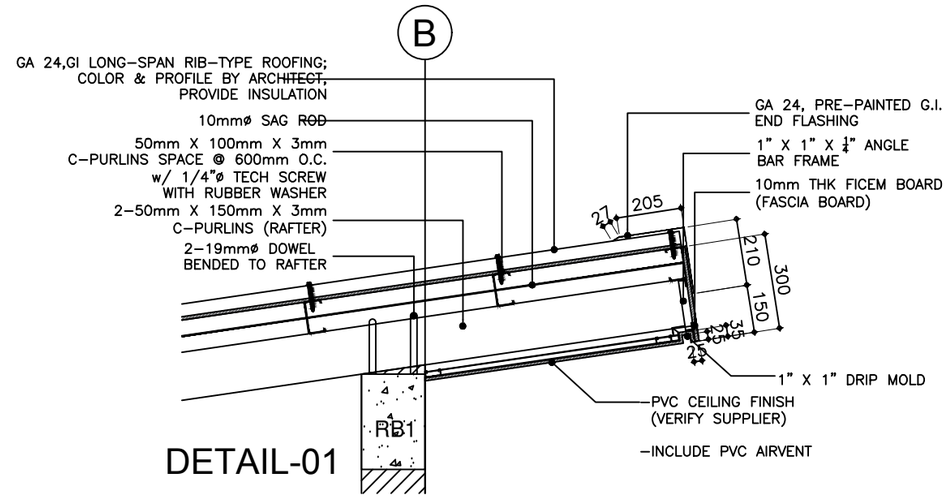

DETAIL-01

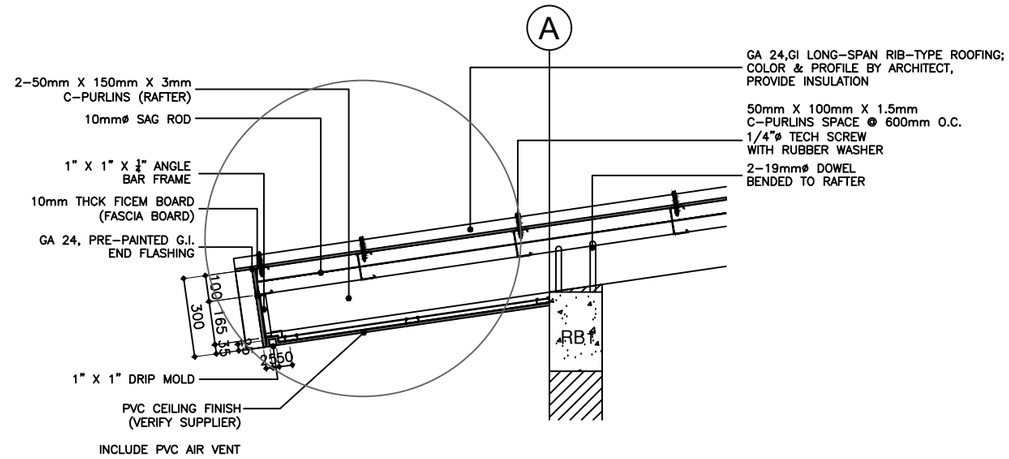

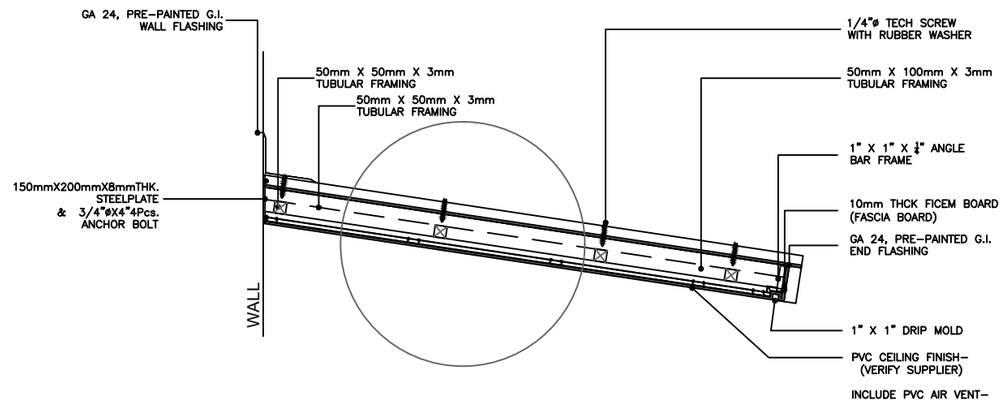

1 / S-200 **ROOF FRAMING DETAILS**

SCALE: NTS

REPUBLIC OF THE PHILIPPINES DEPARTMENT OF SOCIAL WELFARE AND DEVELOPMENT PRK. BUMANAAG, BRGY.ZONE III, KORONADAL CITY, SOUTH COTABATO, FO XII	PREPARED BY: ENGR. CRESSYL ANN E. BANTAYA TECHNICAL FACILITATOR CHECKED BY: ENGR. FRANCIS C. ESTOMATA PDO III	RA 9266 SECTION 33 *Drawings and specifications and other contract documents duly signed, stamped or sealed, as instruments of service, are the intellectual property and documents of the architect, whether the object for which they are made is executed or not. It shall be unlawful for any person to duplicate or make copies of said documents for use in the repetition of and for other projects or buildings, whether executed partly or in whole, without the written consent of the architect or author of said documents.*	REVIEWED AND VERIFIED BY: ENGR. ROLLY A. TEOFILO PDO IV FOR INFRA	PROJECT TITLE: CONSTRUCTION OF 2-UNITS ISOLATION BUIDLING (11-ROOMS) LOCATION: RRCY, BRGY. BUKAY PAIT, TANTANGAN, SOUTH COTABATO	APPROVED BY: CEZARIO JOEL C. ESPEJO REGIONAL DIRECTOR DSWD - FIELD OFFICE XII	SHEET CONTENT ROOF FRAMING DETAILS	REVISIONS MARK / DATE	PROJECT NO. DRAWN BY : CEB DESIGNED BY : DATE : -- CHECKED BY : FCE	SHEET NO. S-200 SCALE A3 AS SHOWN A1